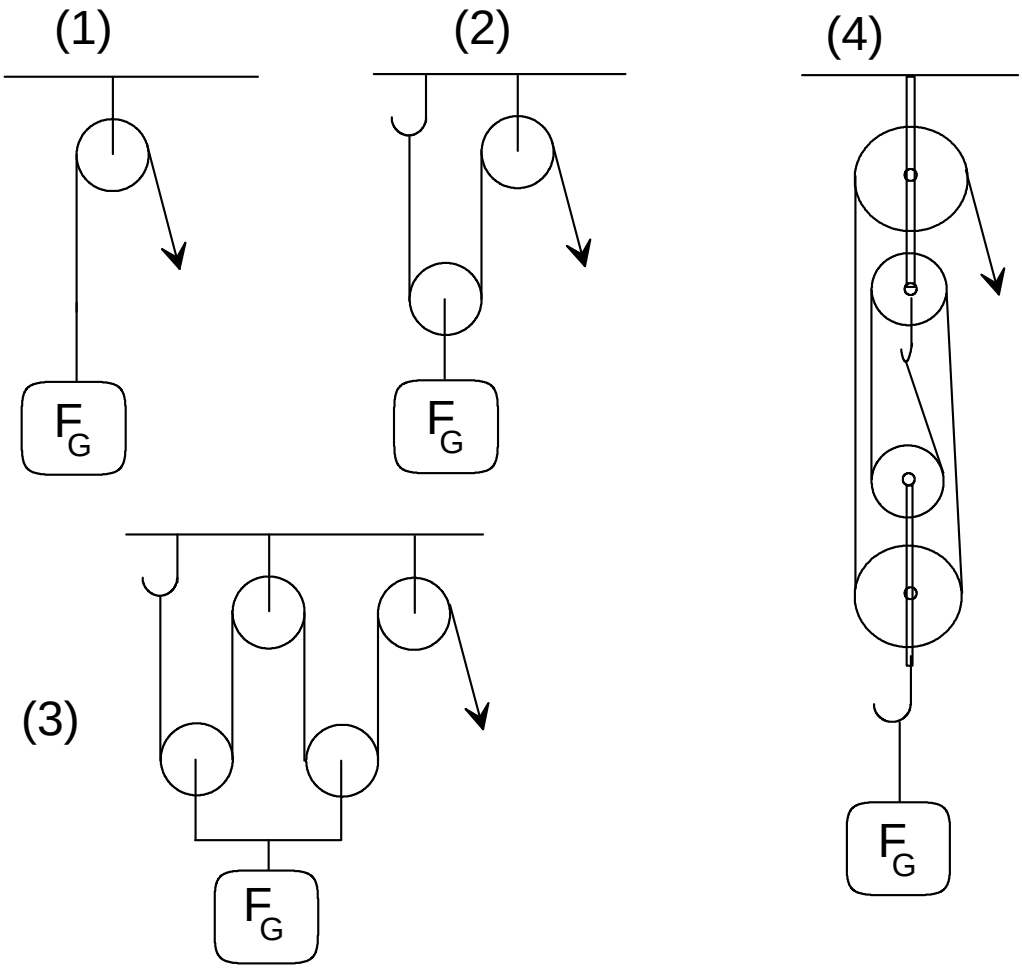
(1)
(2)
(4)
(3)
F_G
F_G
F_G
F_G

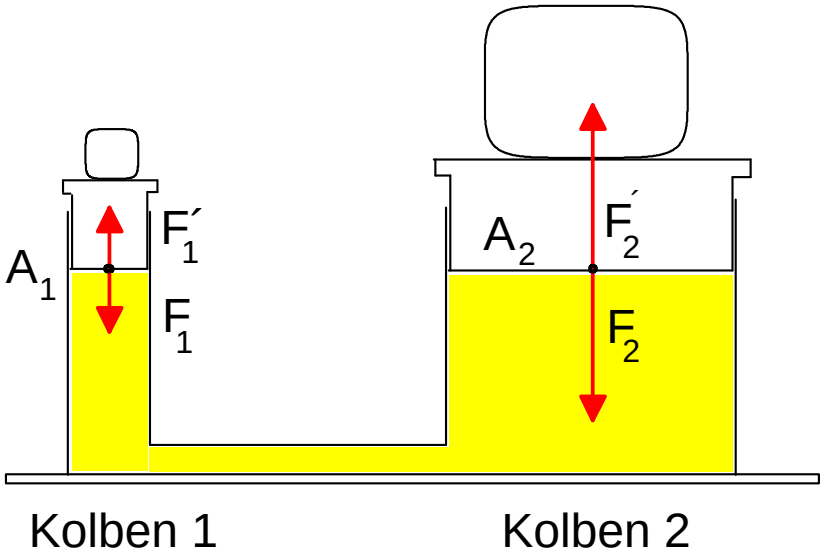
A_1
F_1'
F_1
A_2
F_2'
F_2
Kolben 1
Kolben 2